Cambridge Assessment International Education

Cambridge International AS & A Level

CANDIDATE NAME

CENTRE NUMBER

CANDIDATE NUMBER

7235844091

PHYSICS **9702/21**

Paper 2 AS Level Structured Questions **October/November 2021**

1 hour 15 minutes

You must answer on the question paper.

No additional materials are needed.

INSTRUCTIONS

- Answer **all** questions.
- Use a black or dark blue pen. You may use an HB pencil for any diagrams or graphs.
- Write your name, centre number and candidate number in the boxes at the top of the page.
- Write your answer to each question in the space provided.
- Do **not** use an erasable pen or correction fluid.
- Do **not** write on any bar codes.
- You may use a calculator.
- You should show all your working and use appropriate units.

INFORMATION

- The total mark for this paper is 60.
- The number of marks for each question or part question is shown in brackets [ ].

This document has **16** pages. Any blank pages are indicated.

DC (DH/CGW) 199364/3
© UCLES 2021

[Turn over

Data

speed of light in free space	$c = 3.00 \times 10^{8}\,\text{m s}^{-1}$
permeability of free space	$\mu_0 = 4\pi \times 10^{-7}\,\text{H m}^{-1}$
permittivity of free space	$\varepsilon_0 = 8.85 \times 10^{-12}\,\text{F m}^{-1}$
	$(\frac{1}{4\pi\varepsilon_0} = 8.99 \times 10^{9}\,\text{m F}^{-1})$
elementary charge	$e = 1.60 \times 10^{-19}\,\text{C}$
the Planck constant	$h = 6.63 \times 10^{-34}\,\text{J s}$
unified atomic mass unit	$1\,\text{u} = 1.66 \times 10^{-27}\,\text{kg}$
rest mass of electron	$m_e = 9.11 \times 10^{-31}\,\text{kg}$
rest mass of proton	$m_p = 1.67 \times 10^{-27}\,\text{kg}$
molar gas constant	$R = 8.31\,\text{J K}^{-1}\,\text{mol}^{-1}$
the Avogadro constant	$N_A = 6.02 \times 10^{23}\,\text{mol}^{-1}$
the Boltzmann constant	$k = 1.38 \times 10^{-23}\,\text{J K}^{-1}$
gravitational constant	$G = 6.67 \times 10^{-11}\,\text{N m}^2\,\text{kg}^{-2}$
acceleration of free fall	$g = 9.81\,\text{m s}^{-2}$

© UCLES 2021

Formulae

uniformly accelerated motion	$s = ut + \frac{1}{2}at^2$ $v^2 = u^2 + 2as$
work done on/by a gas	$W = p\Delta V$
gravitational potential	$\phi = -\frac{Gm}{r}$
hydrostatic pressure	$p = \rho gh$
pressure of an ideal gas	$p = \frac{1}{3}\frac{Nm}{V}\langle c^2 \rangle$
simple harmonic motion	$a = -\omega^2 x$
velocity of particle in s.h.m.	$v = v_0 \cos \omega t$ $v = \pm \omega \sqrt{(x_0^2 - x^2)}$
Doppler effect	$f_o = \frac{f_s v}{v \pm v_s}$
electric potential	$V = \frac{Q}{4\pi\varepsilon_0 r}$
capacitors in series	$1/C = 1/C_1 + 1/C_2 + \ldots$
capacitors in parallel	$C = C_1 + C_2 + \ldots$
energy of charged capacitor	$W = \frac{1}{2}QV$
electric current	$I = Anvq$
resistors in series	$R = R_1 + R_2 + \ldots$
resistors in parallel	$1/R = 1/R_1 + 1/R_2 + \ldots$
Hall voltage	$V_H = \frac{BI}{ntq}$
alternating current/voltage	$x = x_0 \sin \omega t$
radioactive decay	$x = x_0 \exp(-\lambda t)$
decay constant	$\lambda = \frac{0.693}{t_{\frac{1}{2}}}$

© UCLES 2021

[Turn over

Answer **all** the questions in the spaces provided.

1 **(a)** Define *density*.

.....

..... [1]

(b) A smooth pebble, made from uniform rock, has the shape of an elongated sphere as shown in Fig. 1.1.

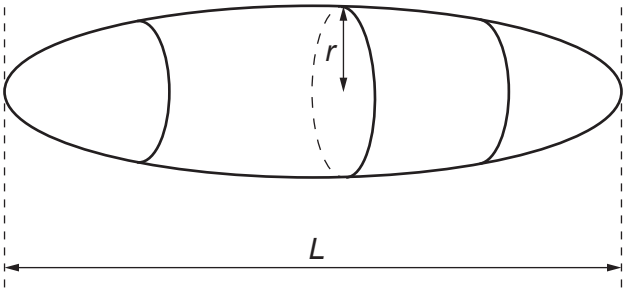

Fig. 1.1

The length of the pebble is *L*. The cross-section of the pebble, in the plane perpendicular to *L*, is circular with a maximum radius *r*.

A student investigating the density of the rock makes measurements to determine the values of *L*, *r* and the mass *M* of the pebble as follows:

$$L = (0.1242 \pm 0.0001)\,\text{m}$$
$$r = (0.0420 \pm 0.0004)\,\text{m}$$
$$M = (1.072 \pm 0.001)\,\text{kg}.$$

(i) State the name of a measuring instrument suitable for making this measurement of *L*.

..... [1]

(ii) Determine the percentage uncertainty in the measurement of *r*.

percentage uncertainty = ... % [1]

© UCLES 2021

(c) The density ρ of the rock from which the pebble in **(b)** is composed is given by

$$\rho = \frac{Mr^n}{kL}$$

where n is an integer and k is a constant, with no units, that is equal to 2.094.

(i) Use SI base units to show that n is equal to –2.

[2]

(ii) Calculate the percentage uncertainty in ρ.

percentage uncertainty = ... % [3]

(iii) Determine ρ with its absolute uncertainty. Give your values to the appropriate number of significant figures.

ρ = (..... ± .....) kg m^{-3} [3]

[Total: 11]

2 **(a)** Define *momentum*.

.....

..... [1]

(b) Two balls X and Y, of equal diameter but different masses 0.24 kg and 0.12 kg respectively, slide towards each other on a frictionless horizontal surface, as shown in Fig. 2.1.

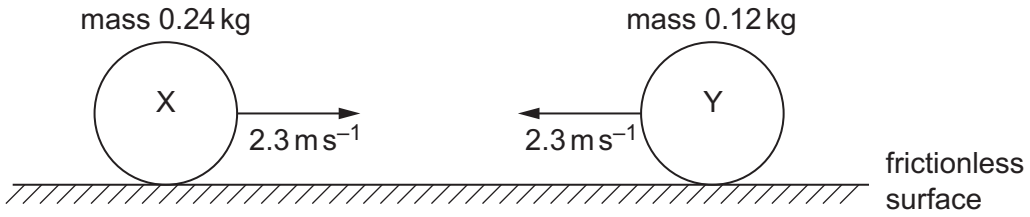

Fig. 2.1

Both balls have initial speed 2.3 m s^{-1} before they collide with each other. Fig. 2.2 shows the variation with time t of the force F_Y exerted on ball Y by ball X during the collision.

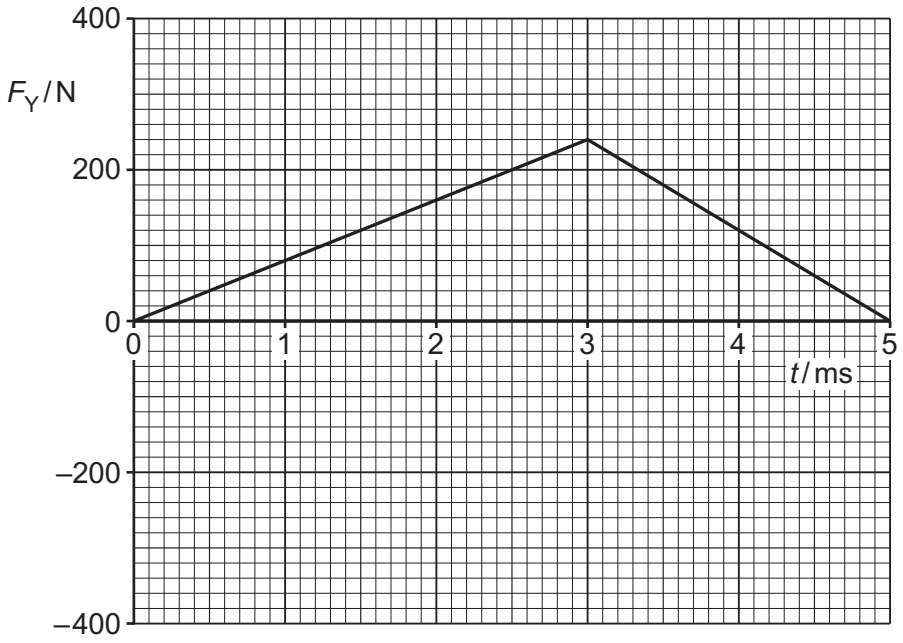

Fig. 2.2

(i) Calculate the kinetic energy of ball X before the collision.

kinetic energy = ... J [3]

© UCLES 2021

(ii) The area enclosed by the lines and the time axis in Fig. 2.2 represents the change in momentum of ball Y during the collision.

Determine the magnitude of the change in momentum of ball Y.

change in momentum = ... Ns [2]

(iii) Calculate the magnitude of the velocity of ball Y after the collision.

velocity = ... $m s^{-1}$ [2]

(c) On Fig. 2.3, sketch the variation with time t of the force F_X exerted on ball X by ball Y during the collision in **(b)**.

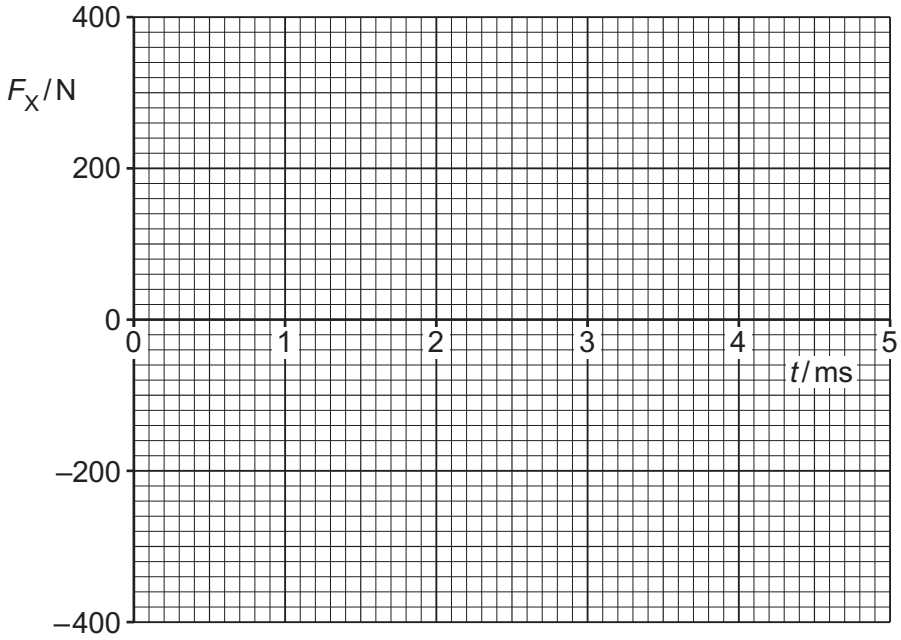

Fig. 2.3

[3]

[Total: 11]

3 **(a)** A uniform metal bar, initially unstretched, has sides of length *w*, *x* and *y*, as shown in Fig. 3.1.

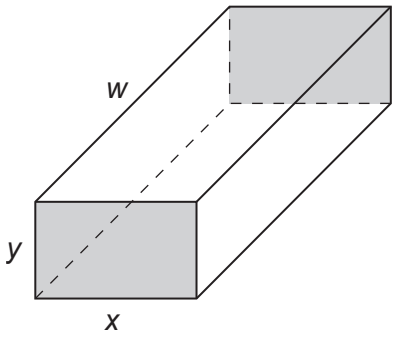

Fig. 3.1

The bar is now stretched by a tensile force *F* applied to the shaded ends. The changes in the lengths *x* and *y* are negligible. The bar now has sides of length *x*, *y* and *z*, as shown in Fig. 3.2.

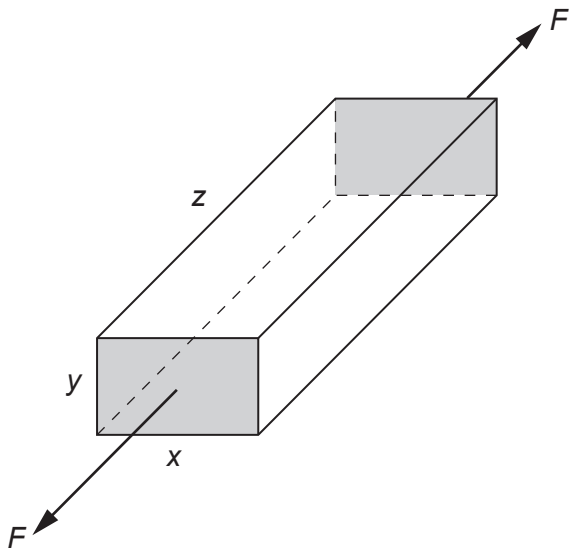

Fig. 3.2

Determine expressions, in terms of some or all of *F*, *w*, *x*, *y* and *z*, for:

(i) the stress σ applied to the bar by the tensile force

σ = ... [1]

(ii) the strain ε in the bar due to the tensile force

ε = ... [1]

(iii) the Young modulus *E* of the metal from which the bar is made.

E = ... [2]

© UCLES 2021

(b) A copper wire is stretched by a tensile force that gradually increases from 0 to 280 N. The variation with extension of the tensile force is shown in Fig. 3.3.

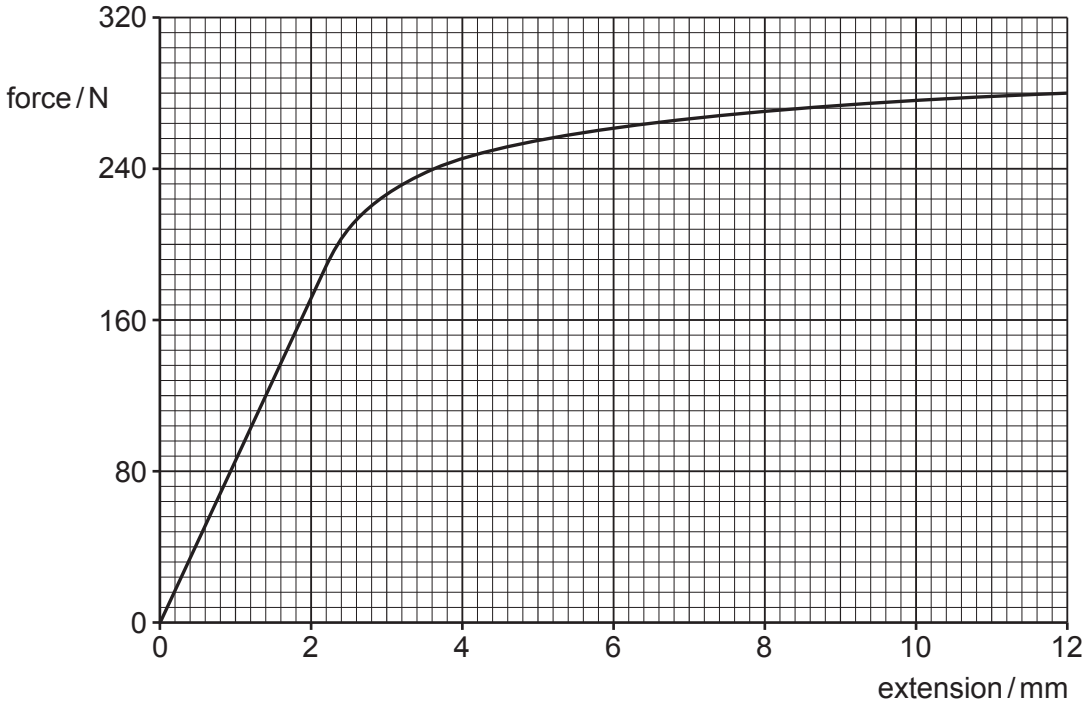

Fig. 3.3

(i) State the maximum extension of the wire for which it obeys Hooke's law.

extension = ... mm [1]

(ii) Use Fig. 3.3 to determine the strain energy in the wire when the tensile force is 120 N.

strain energy = ... J [3]

(iii) Explain why the work done in stretching the wire to an extension of 12 mm is not equal to the energy recovered when the tensile force is removed.

.....

.....

..... [2]

[Total: 10]

© UCLES 2021

4 **(a)** By reference to the direction of transfer of energy, state what is meant by a *longitudinal* wave.

.....

..... [1]

(b) A vehicle travels at constant speed around a wide circular track. It continuously sounds its horn, which emits a single note of frequency 1.2 kHz. An observer is a large distance away from the track, as shown in the view from above in Fig. 4.1.

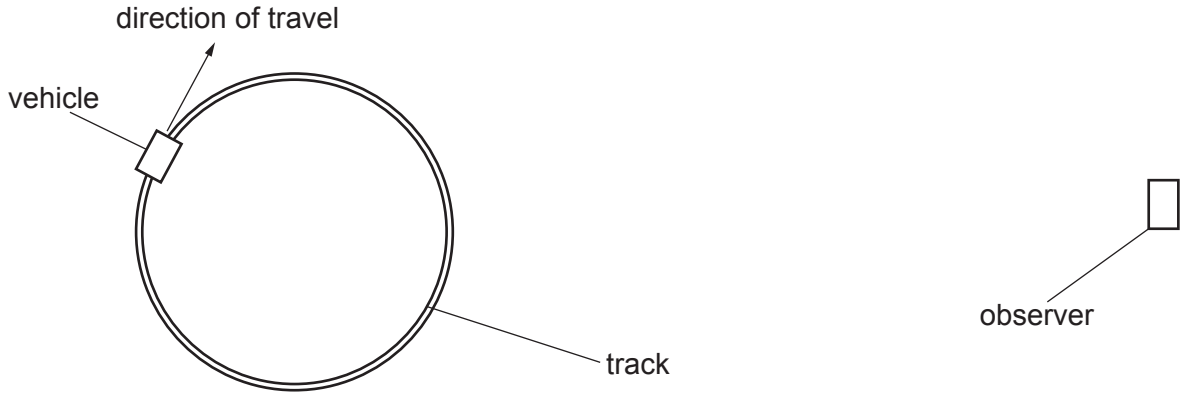

Fig. 4.1 (not to scale)

Fig. 4.2 shows the variation with time of the frequency *f* of the sound of the horn that is detected by the observer. The time taken for the vehicle to travel once around the track is *T*.

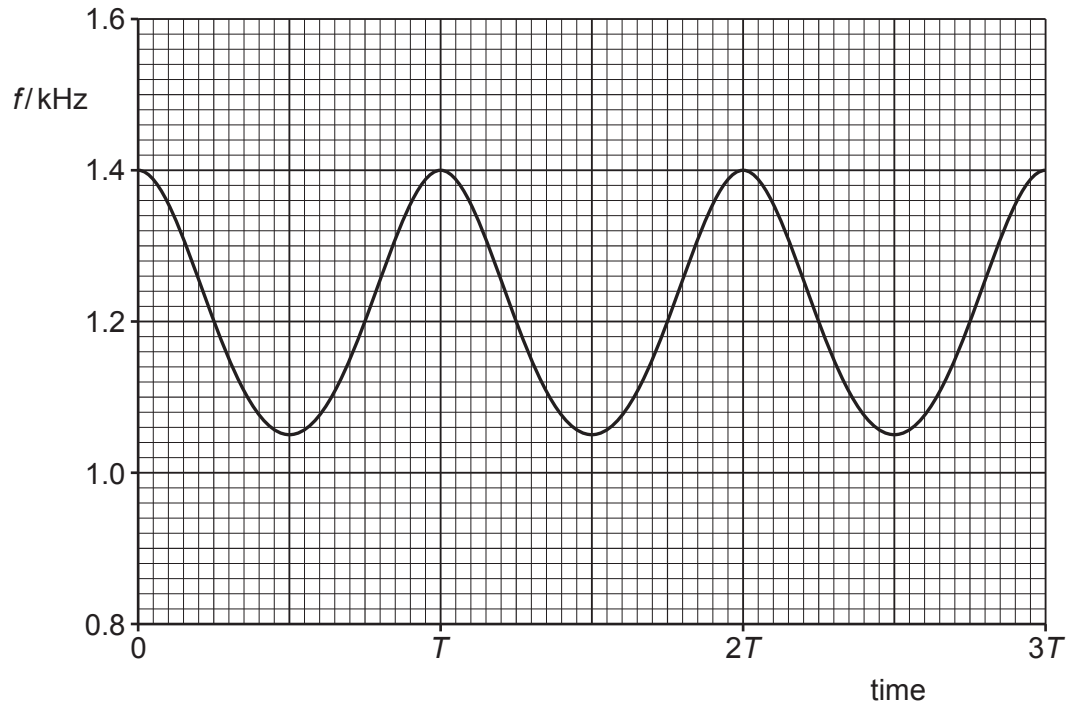

Fig. 4.2

(i) Explain why the frequency of the sound detected by the observer is sometimes above and sometimes below 1.2 kHz.

.....

.....

.....

..... [2]

(ii) State the name of the phenomenon in **(b)(i)**.

..... [1]

(iii) On Fig. 4.1, mark with a letter X the position of the vehicle when it emitted the sound that is detected at time T. [1]

(iv) On Fig. 4.1, mark with a letter Y the position of the vehicle when it emitted the sound that is detected at time $\frac{9T}{4}$. [1]

(c) The speed of the sound in the air is 320 m s^{-1}.

Use Fig. 4.2 to determine the speed of the vehicle in **(b)**.

speed = ... m s^{-1} [3]

[Total: 9]

5 **(a)** State Kirchhoff's first law.

.....

.....

..... [2]

(b) The circuit shown in Fig. 5.1 contains a battery of electromotive force (e.m.f.) *E* and negligible internal resistance connected to four resistors R_1, R_2, R_3 and R_4, each of resistance *R*.

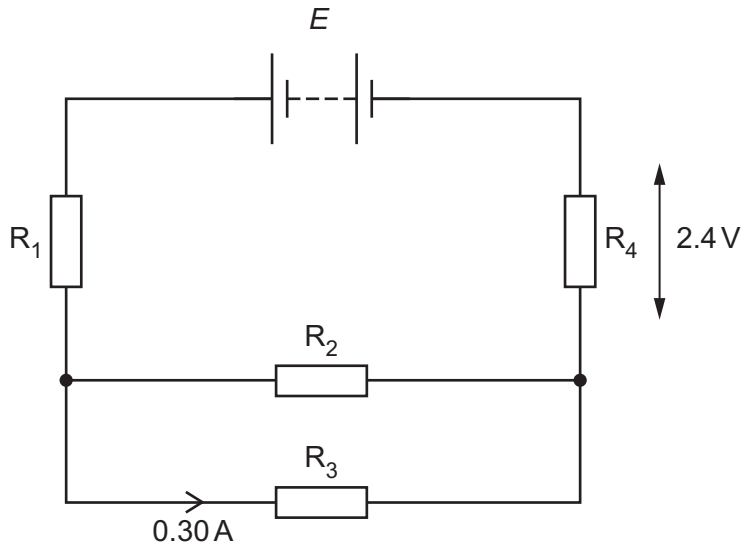

Fig. 5.1

The current in R_3 is 0.30 A and the potential difference (p.d.) across R_4 is 2.4 V.

(i) Show that *R* is equal to 4.0 Ω.

[2]

(ii) Determine the e.m.f. *E* of the battery.

E = ... V [2]

(c) The battery in **(b)** is replaced with another battery of the same e.m.f. E but with an internal resistance that is not negligible.

State and explain the change, if any, in the total power produced by the battery.

.....

.....

..... [2]

(d) The resistors in the circuit of Fig. 5.1 are made from nichrome wire of uniform radius 240 μm. The length of this wire needed to make each resistor is 0.67 m.

Calculate the resistivity of nichrome.

resistivity = ... Ω m [3]

[Total: 11]

6 **(a)** Complete Table 6.1 to show the masses (in terms of the unified atomic mass unit u) and charges (in terms of the elementary charge *e*) of α, β^+ and β^- particles.

Table 6.1

	mass / u	charge / *e*
α-particle		
β^+ particle		
β^- particle		

[4]

(b) Carbon-14 is radioactive and decays by emission of β^- particles.

(i) Nuclei do not contain β^- particles.

Explain the origin of the β^- particle that is emitted from the nucleus during β^- decay.

.....

.....

..... [1]

(ii) State the change in the quark composition of a carbon-14 nucleus when it emits a β^- particle.

..... [1]

(iii) Suggest why the β^- particles are emitted with a range of different energies.

.....

.....

.....

..... [2]

[Total: 8]

© UCLES 2021

BLANK PAGE

BLANK PAGE

Permission to reproduce items where third-party owned material protected by copyright is included has been sought and cleared where possible. Every reasonable effort has been made by the publisher (UCLES) to trace copyright holders, but if any items requiring clearance have unwittingly been included, the publisher will be pleased to make amends at the earliest possible opportunity.

To avoid the issue of disclosure of answer-related information to candidates, all copyright acknowledgements are reproduced online in the Cambridge Assessment International Education Copyright Acknowledgements Booklet. This is produced for each series of examinations and is freely available to download at www.cambridgeinternational.org after the live examination series.

Cambridge Assessment International Education is part of the Cambridge Assessment Group. Cambridge Assessment is the brand name of the University of Cambridge Local Examinations Syndicate (UCLES), which itself is a department of the University of Cambridge.

© UCLES 2021